GAS PUMP with SOLENOID VALVE and HONDA ENGINE

- Gas engine pump will provide 10,000 psi. hydraulic force at remote locations
- Industrial grade 10.2 hp Honda gas engine
- Ideal for applications when a remote control is required
- Two speed pump designed for rapid cylinder advance
- Gas pump features a sturdy protective roll cage for use in the toughest environments

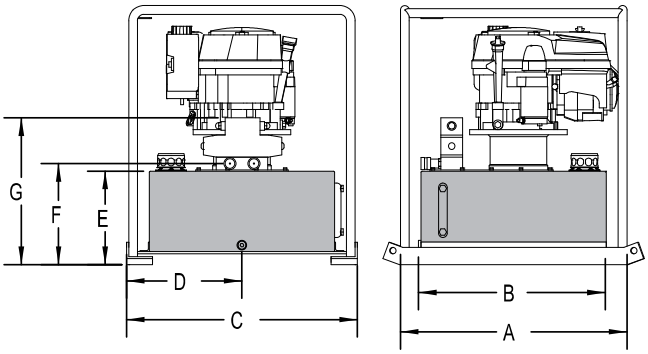

Motor Size (hp)	Usable Oil Capacity (gal)	Model Number	Max. Pressure Output (psi)	Pressure Rating (psi)		Oil Output Flow Rate (in³/min)		Valve Type	Valve Function	Rotation Speed (rpm)	Sound Level (dBA)	Weight (lbs)
				1st Stage	2nd Stage	1st Stage	2nd Stage					
10.2	5	PGSL1005	10,000	700	10,000	600	200	3 way, 3 position	Advance/ Hold/ Return	3,600	93	194
10.2	5	PGSML1005	10,000	700	10,000	600	200	4 way, 3 position	Advance/ Hold/ Return	3,600	93	194
10.2	10	PGSL1010	10,000	700	10,000	600	200	3 way, 3 position	Advance/ Hold/ Return	3,600	93	223
10.2	10	PGSML1010	10,000	700	10,000	600	200	4 way, 3 position	Advance/ Hold/ Return	3,600	93	223
10.2	15	PGSL1015	10,000	700	10,000	600	200	3 way, 3 position	Advance/ Hold/ Return	3,600	93	252
10.2	15	PGSML1015	10,000	700	10,000	600	200	4 way, 3 position	Advance/ Hold/ Return	3,600	93	252

Model Number	Dimensions (in)						
	A	B	C	D	E	F	G
PGSL1005	26.57	21.5	20.94	10.47	11.50	12.43	15.47
PGSML1005	26.57	21.5	20.94	10.47	11.50	12.43	18.74
PGSL1010	28.25	23.37	27	13.5	12	12.93	17.375
PGSML1010	28.5	23.37	27	13.5	12	12.93	19.765
PGSL1015	28.25	23.37	27	13.5	12	12.93	17.375
PGSML1015	28.25	23.37	27	13.5	12	12.93	19.765